REMOVE SHARP EDGES. DO NOT SCALE – IF IN DOUBT, ASK.

COPYRIGHT
This drawing is protected by copyright must not be reproduced in any form, including manufacture of the product shown therein, without the prior written consent of the copyright owners.
©2004 MIDLAND VALVES

GENERAL MACHINING TOLERANCES
± 0.3mm UP TO 250mm
± 0.5mm OVER 250mm TO 500mm
± 1.2mm OVER 500mm
(OR THEIR IMPERIAL EQUIVALENTS)

SURFACE FINISHES: –
ROUGH MACHINE 6.3 µm
FINISH MACHINE 3.2 µm

THIRD ANGLE PROJECTION

DRAWING NUMBER	ISSUE
03.6473	0

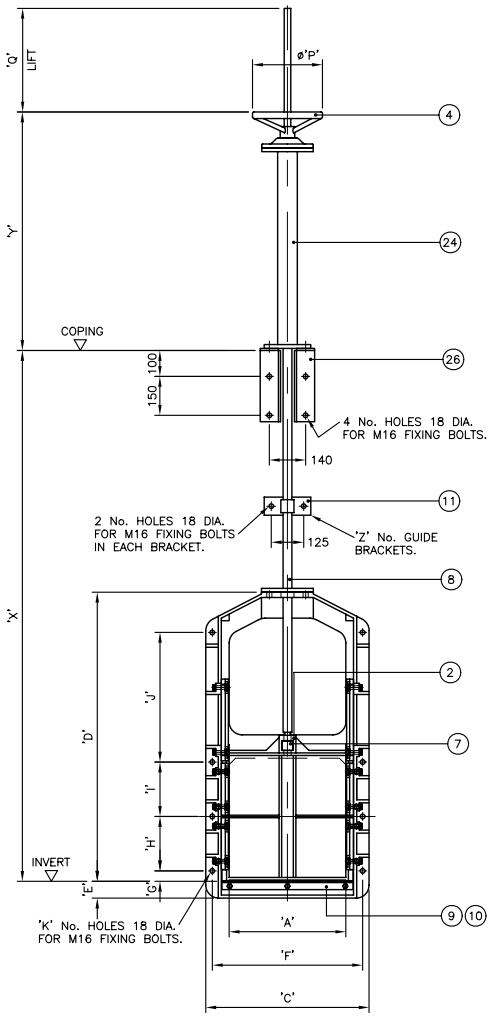

FRONT ELEVATION

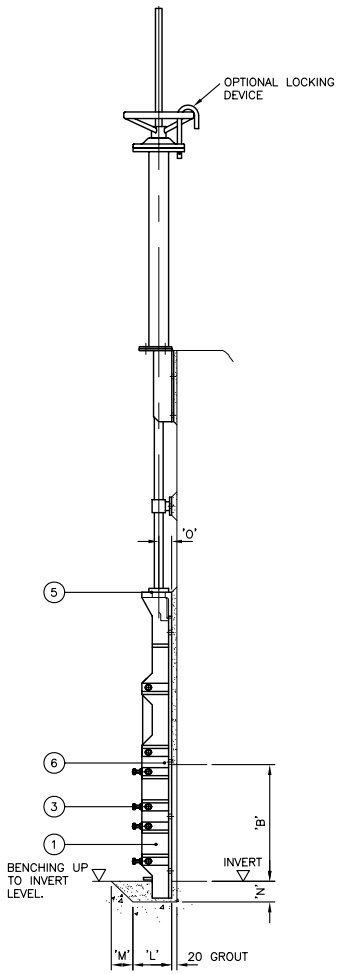

SIDE ELEVATION

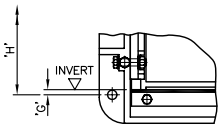

INVERT FIXING DETAIL FOR THE 150 SIZE

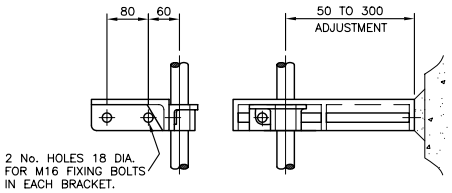

ENLARGED DETAIL OF OPTIONAL CAST IRON GUIDE BRACKET

PENSTOCK DIMENSION TABLE

SIZE	'A'	'B'	'C'	'D'	'E'	'F'	'G'	'H'	'I'	'J'	'K'	'L'	'M'	'N'	'O'	'P'	'Q'
150	150	150	320	470	65	275	30	210	–	–	4	130	80	80	50	270	175
200	200	200	370	570	80	330	10	210	–	–	4	130	100	80	50	270	225
225	225	225	425	675	93	380	12	200	–	300	6	130	100	80	50	270	250
250	250	250	425	675	80	380	25	200	–	300	6	130	100	80	50	270	275
300	300	300	470	805	80	430	45	210	–	300	6	130	100	80	50	270	325
350	350	350	580	1025	115	530	35	210	210	450	8	150	90	90	50	270	375
375	375	375	580	1025	105	530	25	210	210	450	8	150	90	90	50	270	400
400	400	400	580	1025	90	530	10	210	210	450	8	150	90	90	50	270	425
450	450	450	630	1115	90	580	15	210	210	500	8	150	80	90	50	270	475
500	500	500	700	1230	100	640	130	235	235	400	8	180	100	100	70	350	525
600	600	600	800	1425	100	740	65	235	235	600	8	180	100	100	70	350	625

OPGEAR DIMENSION TABLE

PENSTOCK SIZE	'X'	'Y'	'Z'

COMPONENT TABLE

ITEM	PART	SPECIFICATION
1	FRAME	BS 1452, 220
2	DOOR	BS 1452, 220
3	WEDGES	BS 1452, 220
4	HANDWHEEL	BS 1452, 220
5	GUIDE PLATE	BS 1452, 220
6	SEATS	BS 2874, CZ121
7	STEM NUT	BS 1400, LG2
8	STEM	BS 970, 303S21
9	CILL	BS 970, 304S21
10	INVERT SEAL	ELASTOMER
11	GUIDE BRACKET	MILD STEEL
..		
24	FLOOR PILLAR	MILD STEEL
..		
26	COPING BRACKET	MILD STEEL

ISSUE	NAME	DATE	CHECKED	REVISION

DRAWN BY	DATE	CHECKED BY	DATE
JMW	19/01/04	ML	19/01/04

SCALE	DRAWING NUMBER	ISSUE
1:NTS	03.6473	0

JOB No. | PART No.

MATERIAL SPECIFICATION:
AS LISTED ON DRAWING

CONSULTING ENGINEERS:
CUSTOMER:
SCHEME:

TITLE:
ARRANGEMENT OF SQUARE OPENING CAST IRON PENSTOCKS, RISING STEM WITH COPING BRKT & H/WHEEL. FLUSH INVERT.

MIDLAND VALVES
SUPPLIERS OF PENSTOCKS TO THE WATER INDUSTRY

MIDLAND VALVES
42 CROSSGATE ROAD
PARK FARM INDUSTRIAL ESTATE
REDDITCH, WORCESTERSHIRE
B98 7SN
TELE: 01527 517542
FAX: 01527 518087
e-mail: mike@midlandvalves.fsnet.co.uk

FILE REF: MV A3-20
SCALE 1:20
ORIGINAL SHEET SIZE A3

ALL DIMENSIONS IN mm UNLESS OTHERWISE STATED